Elliott Calibration and Troubleshooting Manual

GREER COMPANY ®

TABLE OF CONTENTS

Introduction

This system is designed as an aid to crane operation. The operator must be knowledgeable in safety guidelines, crane capacity information, and the crane manufacturer's specifications.

This manual describes the setup, operation, and maintenance of the System. Please read, understand, and follow the instructions in this manual.

1.1 Overview and Preparation

This manual provides general information and methods for isolating problems that may happen during operation. Some problems may require the replacement of parts, or return of parts to the factory for servicing. Service personnel should have previous training and experience in the procedure for setup and operation of this system.

Tools necessary:

- Tool kit consisting of wrenches and screwdrivers (flat and Phillips')
- Digital level accurate to 0.1°
- 150-200 ft tape measure graduated in tenths of a foot (1/10)
- Digital multimeter

NOTE: Low-cost analog meters are not appropriate; their input impedance may give false readings.

2.1 System Self-Test

When the power is turned on, the System performs a “SELF-TEST.” This verifies the computer, display console, cable, and sensors are working properly. During the self-test, the display will show the crane model/load chart number and units of measurement.

After the startup screen, the Crane Configuration page will display. Use this screen to check the configuration of the crane before proceeding to the home, operator alarm, or calibration screen.

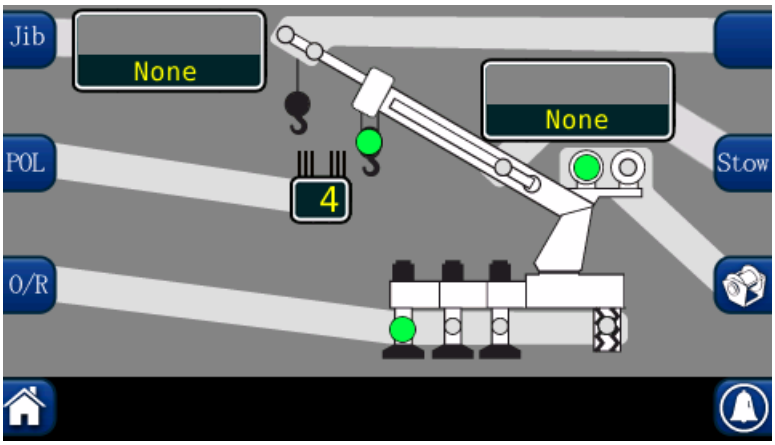

If the above does not occur, refer to **Display Console Problems**.

2.2 Display Console Problems

Display console problems can be difficult to isolate due to the interaction between the display and the computer unit. Failure of either unit or the cabling connecting the units can cause a malfunction. “No Fault Code” diagnoses of other system problems can be completed without the display and it’s communication with the computer unit.

To solve problems using the display indications, observe the display at “Power On” and through the self-test. Use the following chart to help with the diagnosis.

Problem	Action
There are no display indications in any of the windows when the power is turned on. Or a “No Communications” message appears.	Refer to **Computer Internal Status Indicators**.
The display unit does not cycle through the self-test. The data in the display windows appears jumbled with missing segments.	Replace the display unit.

2.3 Fault Reporting and Fault Codes

System fault codes provide ways to locate and assess problems within the Insight system. Each time the system is turned on, it performs a self-test that lasts approximately 6 seconds.

Faults detected during the self-test are indicated on the display console:

- “WARNING SYSTEM FAULT!” will display at the bottom of the text window.

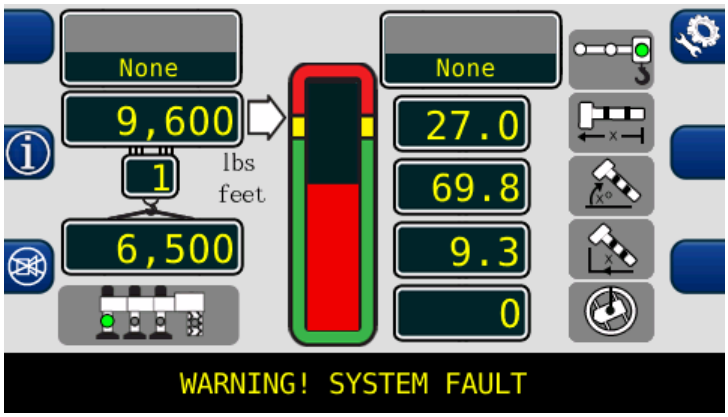

To view the fault codes, press and hold the (i) button as shown.

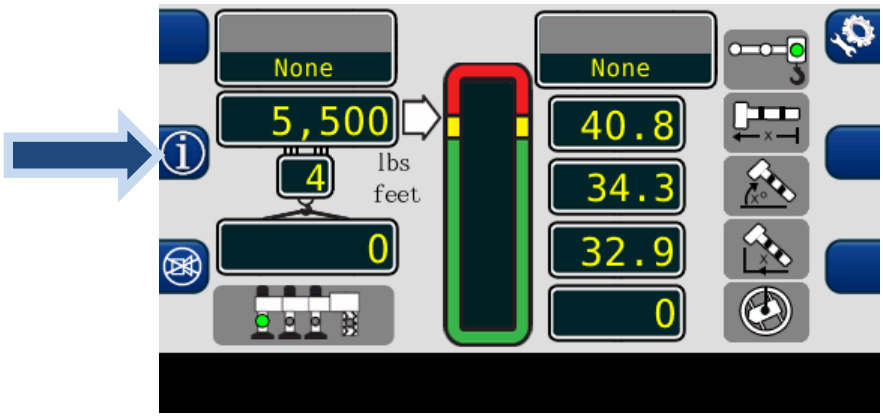

The faults will be listed across the bottom of the text window.

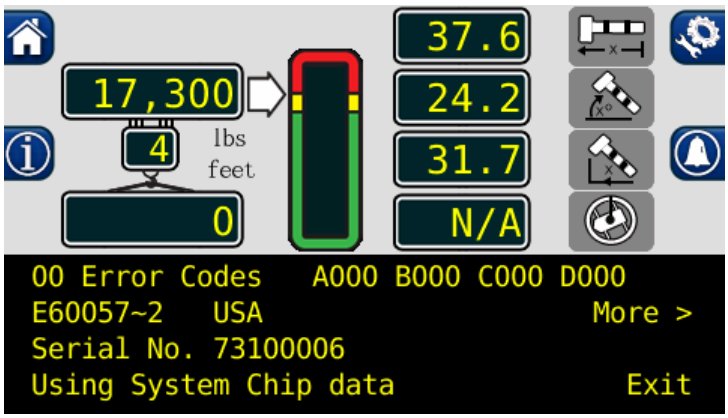

2.3.1 Group “A” Fault Codes

NOTE: Check and repair “B” and “C” group faults before proceeding with group “A” fault finding sensors.

Group “A” fault codes represent faults detected for analog sensors.

The following chart details all the available codes in the left column and the actions to take in the right column.

FAULT CODE	SWING SENSOR	BOOM ANGLE SENSOR	EXTENSION SENSOR	TDX 1 ROD PRESSURE	TDX 0 PISTON PRESSURE	ACTION
000	No Fault Found					None
001					X	Replace the Computer.
002				X		
003				X	X	
004			X			Refer to the Extension Calibration instructions.
008		X				Refer to Angle Sensor in Calibration instructions.
012		X	X			Refer to Extension, Angle and Reeling Drum Calibration instructions.

2.3.2 Group “B” Fault Codes

Group “B” fault codes represent faults detected for internal analog functions and power feeds to the function kickout and anti-two block switches.

The following chart details all of the available codes in the left column and the actions to take in the right column.

FAULT CODE	FKO POWER FEED	ATB POWER FEED	DISPLAY CONSOLE	ADC 2 INTERNAL FAULT	ADC 1 INTERNAL FAULT	ACTION
016	X					Check Crane Circuit Breakers

2.3.3 Group “C” Fault Codes

Group “C” fault codes represent faults detected for internal computer memories. The following chart details all the available codes in the left column and the actions to take in the right column.

FAULT CODE	SERIAL EEPROM	CRANE DATA	RAM	DUTY DATA	PROGRAM	ACTION
000	NO FAULT FOUND					NONE
008		X				Erase Crane Data
016	X					Replace the Computer

2.3.4 Group “D” Fault Codes

Group “D” fault codes represent faults detected for capacity chart selection. The following chart details all the available codes in the left column and the actions to take in the right column.

FAULT CODE	WRONG SWING AREA	WRONG BOOM LENGTH	CHART NOT FOUND	ACTION
000	No Fault Found			NONE
001			X	Check other sensor faults first, Reselect CRANE SETUP
002		X		Boom length is out of range for selected chart. Check crane setup, boom length and extension.
003		X	X	Check other sensor faults first, Reselect CRANE SETUP

2.4 “No Fault Code” Problems

This section addresses problems not reported by the computer fault code system.

2.4.1 Anti-Two-Block Alarm (ATB)

This section aides diagnosing ATB alarm problems. For detailed information, schematic, and voltages, refer to **ANTI-TWO-BLOCK FUNCTION OVERVIEW**.

PROBLEM:

- *The Anti-Two-Block alarm is continuously ON. Operating the switch at the boom head does not deactivate the alarm.*

This problem suggests an open circuit between the computer ATB input and the ATB switch, or an open circuit between the computer ATB feed and the ATB switch. Check the reeling drum cable for damage. Ensure the two-block switches are correctly connected. Check the slip-ring and wiring inside the extension reel. Check the reel-to-computer cable. Check the connectors.

PROBLEM:

- *The Anti-Two-Block alarm is continuously OFF (safe). Opening the switch at the boom head, by lifting the ATB weight does not activate the alarm.*

This problem suggests a short circuit between the computer ATB input and the computer ATB feed somewhere between the computer and the ATB switch. Check the reeling drum cable for damage. Ensure the two-block switches are correctly connected. Check the slip-ring and wiring inside the extension reel. Check the reel-to-computer cable. Check the connectors.

2.4.2 Displayed Load or Radius Errors

This section gives direction to fault diagnosis of load and radius errors. Load or radius errors can cause early or late tripping of overload alarms. Accuracy of load is governed by the radius accuracy, and the extension, angle, and pressure sensors. Accuracy of radius (unloaded) is governed by the extension and angle sensors.

Ensure there are no system faults before continuing.

2.4.2.1 Check Boom Extension and Boom Angle

1. Ensure the boom is fully retracted.
2. Ensure the reeling drum cable is correctly layered as a single layer across the extension reel surface. Any stacking of the cable will cause extension errors.
3. Using an inclinometer set the boom to 0° (zero) and ensure the displayed boom angle value is 0.0°. If the angle value is not 0.0°, refer to **CALIBRATING THE ANGLE SENSOR ZERO.**
4. Raise the boom to a high angle (60°) and measure the angle with the inclinometer. Ensure the displayed angle matches the inclinometer reading within 0.1°. If the displayed angle is incorrect, refer to **CALIBRATING SPAN OF EXTENSION AND ANGLE**.

5. Check the extension value in the display window for the correct retracted boom length. The retracted boom length should match the retracted boom length from the load chart. The value must be within ± 0.2ft. Fully telescope the boom and ensure the displayed boom length value matches the maximum length of the boom. If the length value is incorrect, follow the EXTENSION SPAN procedure in **CALIBRATING SPAN OF EXTENSION AND ANGLE**.

2.4.2.2 Check Main Boom Radius

NOTE: The required accuracy of taped radius measurements is within ±0.5 feet. When taking radius measurements use a good quality tape that does not stretch. The tape should be graduated in feet and tenths of a foot. Always measure between the swing center of the crane and the center of the load hook with the crane centered over front (rough terrain) or centered over rear (truck crane).

1. Fully retract the boom and ensure the crane configuration is correctly set up.
2. Raise the boom to about 45° and measure the radius. The measured radius must match the displayed radius within +0.5 ft. If it does not match, refer to **CALIBRATING THE ANGLE SENSOR ZERO**.

2.4.2.4 Check Pressure Sensors

There are two pressure sensors installed as part of the system. Both pressure sensors are mounted within the computer unit. One is connected to the piston side of the boom hoist cylinder via flexible hose; the other is connected to the rod side of the boom hoist cylinder via flexible hose. Both hoses are protected by velocity fuses within the boom hoist cylinder valve block on the end of the cylinder.

The pressure sensor located on the piston side, is subject to the hydraulic pressure needed to support the weight of the boom, any attachments, and the load. The pressure sensor on the rod side monitors the pressure necessary to control the down motion of the boom. The computer unit uses this information (along with other sensors such as extension and angle), to compute the weight of the suspended load. The maximum continuous working pressure for the sensors is 250 bar (3625 PSI).

The pressure sensing system is calibrated at the factory. Pressure sensors may not be individually replaced. Any serious problem will necessitate changing the entire computer unit.

1. Lower the boom until the boom hoist cylinder is fully retracted and on its stop.
2. Loosen the hydraulic connections to the pressure sensors to ensure zero pressure is present on the sensors.
3. Enter the calibration mode and press “Menu Up” to access “13 Pressure Monitor” to view both sensor pressures and nett pressure.
4. Check the pressure values of both sensors. The pressure values should be between -75 and +75 PSI. If not, replace the computer unit.
5. Check the nett pressure values of both sensors. This should be between -35 and +35 psi. If not, replace the computer unit.

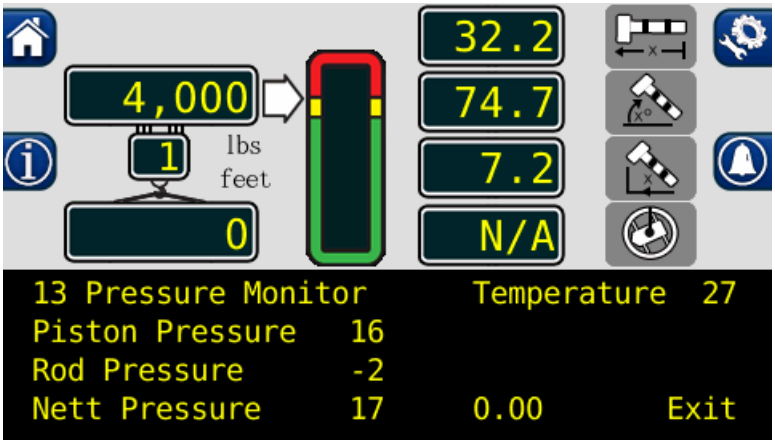

WARNING!

BOTH PRESSURE SENSORS ARE PRE-CALIBRATED FROM THE FACTORY AND SUPPLIED AS PART OF THE COMPUTER. THE PRESSURE SENSORS MAY NOT BE REPLACED. REMOVAL OR REPLACEMENT OF THE PRESSURE SENSORS FROM THE COMPUTER INVALIDATES THE WARRANTY AND WILL ADVERSELY AFFECT THE PRESSURE CALIBRATION.

3.1 Computer Unit Overview

The Computer Unit is the center of the System. It reads the sensors, controls computations and disconnect functions, and communicates with the display console/internal bar graph. The two hydraulic pressure sensors required to sense pressure within the boom hoist cylinder contained within the unit. These sensors, as well as the computer are factory pre-calibrated as a unit and may not be separately replaced in the field.

3.2 Computer Unit Layout

NOTE: Due to differences in computer unit configurations, the locations of board components may vary.

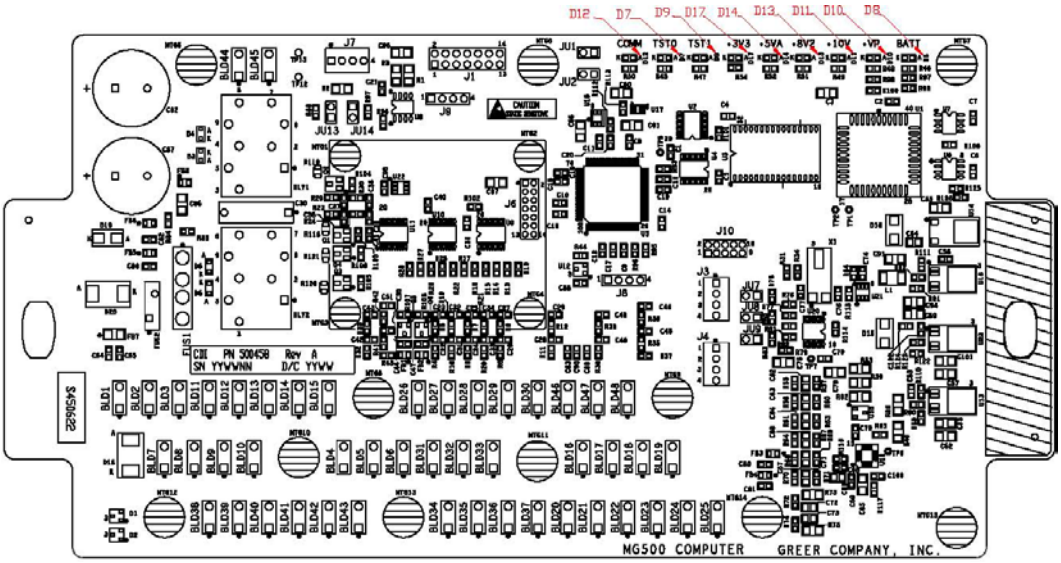

Blade Style Computer

3.3 Internal Status Indicators

The computer unit contains a row of LED indicators for checking computer operation. During normal operation, all LEDs will be illuminated with the COMM indicator blinking. If not, please contact Technical Support for assistance. Use the following chart and preceding images for LED location.

LED Indicator	Function
D7	Communication Indicator TST0
D8	Battery Power_POS
D9	Communication Indicator TST1
D10	+VP
D11	+10V
D12	COMM (Communication Indicator)
D13	+8V2
D14	+5V
D17	+3V3

3.4 Function Kickout Fuse (FUS1)

The computer unit contains a standard 10 AMP replaceable fuse. The fuse protects the function kickout circuit and relay contacts, if a short circuit occurs across the crane kickout solenoids. Replace the fuse, if the system error codes indicate that the function kickout power feed is missing. Ensure the crane circuit breaker is closed and power from the crane is present.

NOTE: Prior to replacing the fuse, ensure any electrical shorts which may have caused the failure of the original fuse have been removed.

3.5 Replacing the Computer Unit

Computer Removal

1. Lower the boom until the boom hoist cylinder is completely retracted and on its stop or the boom is firmly in the boom rest.
2. Disconnect the hydraulic connections at the computer unit.
3. Disconnect both electrical connectors at the computer unit.
4. Remove the hardware securing the computer to the cab wall.

Computer Installation

1. Secure the computer unit to the cab wall with the mounting hardware.
2. Ensure the electrical connections face downward.
3. Connect the electrical connectors.
4. Remove the protective caps from the hydraulic ports.
5. Connect the base-side pressure (green band) hose to the piston pressure port.
6. Connect the rod-side pressure (red band) hose to the rod pressure port.

4.1 Display Console Overview

The Display Console allows the user to see the crane values and crane configuration selection. The display also provides calibration functions used for testing and fault diagnosis.

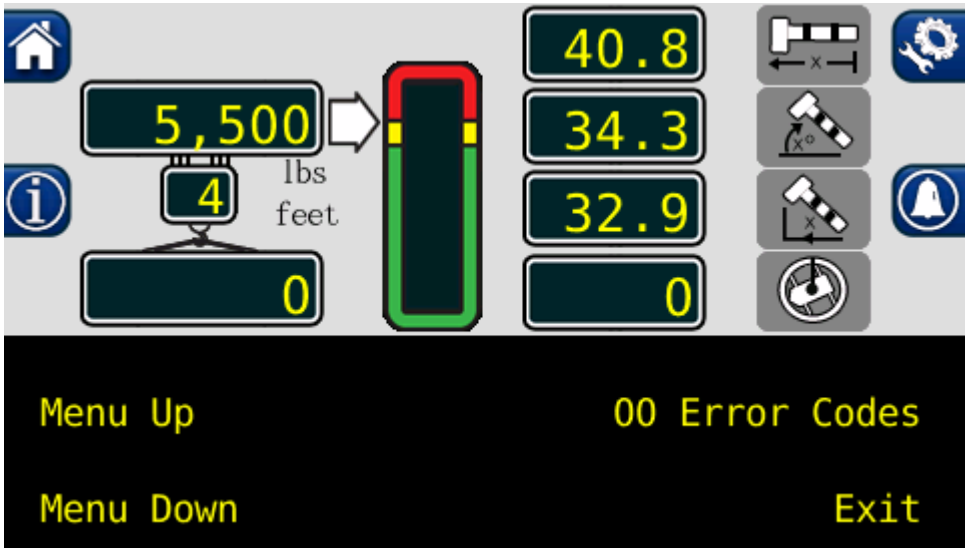

4.2 Checking the Display Console

When operated for extended periods under extreme conditions, the console can become damaged. The damage is not always apparent. To help identify subtle faults that are sometimes difficult to find, please review 4.3 through 4.6.

4.3 Unresponsive Buttons

All button options are not available for use at all times. It is important to verify that the non-responsive button is programmed to respond during the operation of the System. Press the button in the center. Pressing the printed symbol ‘at one end’ may not activate the switch underneath. Buttons that are damaged or have a surface that is worn may cause the switch underneath to operate improperly. In this case, refer to **REPLACING THE DISPLAY CONSOLE**.

4.4 Connectors

There are four, 6-pin Deutsch connectors on the rear of the Insight.

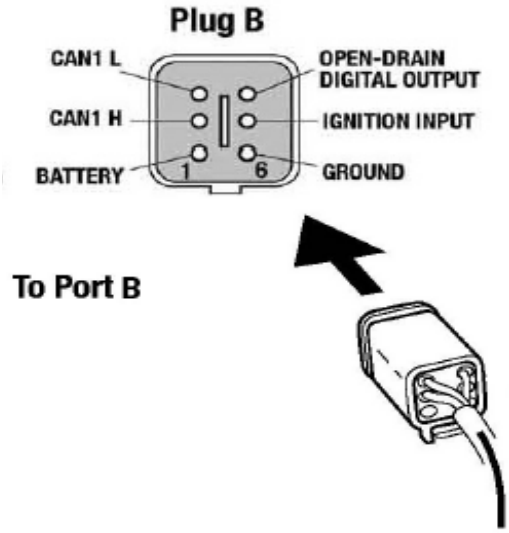

4.5 Horn

Ensure the horn is connected to the wiring harness via the two-pin Deutsch connector.

4.6 Moisture

The Display Console conforms to IP67 in protection against dust and water, when correctly installed.

4.7 Replacing the Display Console

Removal

1. Ensure all power is shut off during this procedure.
2. Disconnect the electrical cable from the rear of the operator's display console.
3. Remove the defective display console from the bracket in the cab.

Installation

1. Put the operator's display console on the bracket located in the cab.
2. Connect the electrical cable to the rear of the console.
3. Power can be turned on.

5.1 Calibration Mode

The Greer Insight is an aid to crane operation. Use this system with an operator trained in Safety Guidelines, crane capacity information, and the crane manufacturer's specifications.

When the computer is new, it has no "Zero" or "Span" calibrations. It is necessary to enter "Zero" and "Span" settings for accurate length and angle calculations.

Tools Needed:

- Digital level accurate to 0.1°
- 150-200ft. tape measure graduated in tenths of a foot
- Digital multimeter

Pre-Requisites for Calibration

- The crane must be properly set on level ground per the Manufacturer's specifications.
- Maximum boom height will be needed. It is necessary the area is free of overhead obstructions.
- All options such as Jibs, Fly's, and Auxiliary Heads must be configured in the computer.

NOTE: *If the Greer computer is reprogrammed, access the "01 Crane Data" menu and ensure "Personality not in Use" is indicated. If this message is not present, press the "Menu Up" button, then press the "Erase Pers. and use ROM data" button to ensure a customized personality is not in use.*

5.2 Entering the Calibration Mode

Follow these steps to ensure proper calibration of the Element unit. The actual crane setup must be reflected on the display. Check the **Greer Element Operator's Manual** for proper setup of the display unit.

1. To enter Calibration Mode, the display must be in "Normal Operating" mode as shown below.
2. Press and hold the indicated buttons simultaneously until the display prompts the user for the security code.

3. Enter the Security Code within 5 seconds, or the system will revert to the "Normal Operating" mode. The numbers in parenthesis indicate the correct order to press the buttons.

5.3 Calibration Menus

Once the security code has been entered, the display will show the following menu.

Scroll through the menu options by pressing the “Menu Up” or “Menu Down” buttons. To select an item, press the button adjacent to the menu listing as shown in the example.

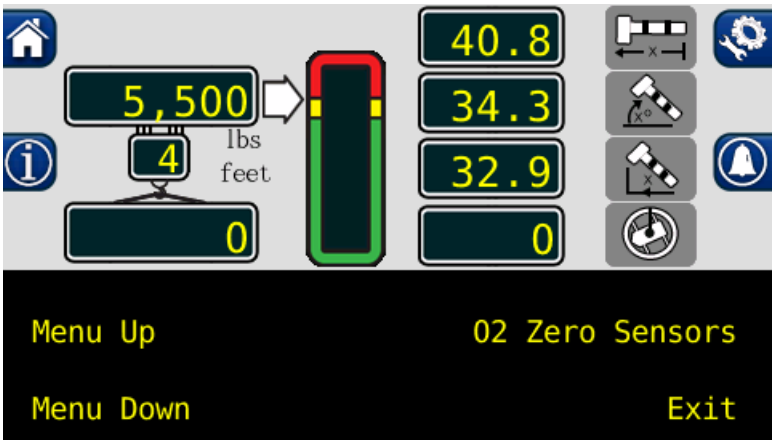

The main menu items used to calibrate the system are:

- 02 Zero Sensors
- 03 Span Sensors
- 04 Swing Sensor

The only calibrations needed are for the Boom Extension Function and the Boom Angle Function. They must be properly set to ZERO. The Swing must also be set to zero, if present.

The Boom Extension and Boom Angle functions must be given a value in order for the Span to be calculated. These numbers are determined by using a digital level on the Boom Angle, and a physical measurement of the Boom Extension.

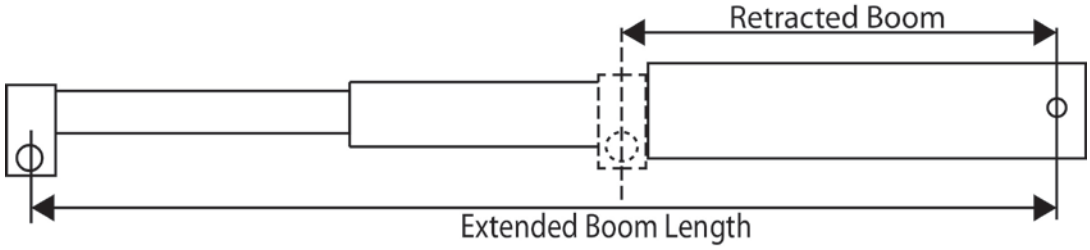

Extended Length – Retracted Length = Span

5.4 Calibrating the Extension Sensor Zero

The reeling drum must be installed on the machine, the cable tied-off and the potentiometer set to a starting point for the zero.

1. Fully retract the boom and lower to 0.0° while using a digital level.
2. Remove the cover from the reeling drum to expose the baseplate sensor assembly.
3. Rotate the extension sensor gear clockwise until the clutch drags/clicks and rotate a ½ turn counterclockwise.
4. The voltage reading between the blue wire and the white wire on the terminal block should measure 0.15 to 0.35 volts. If outside this voltage, rotate the gear to attain proper voltage with the boom fully retracted.

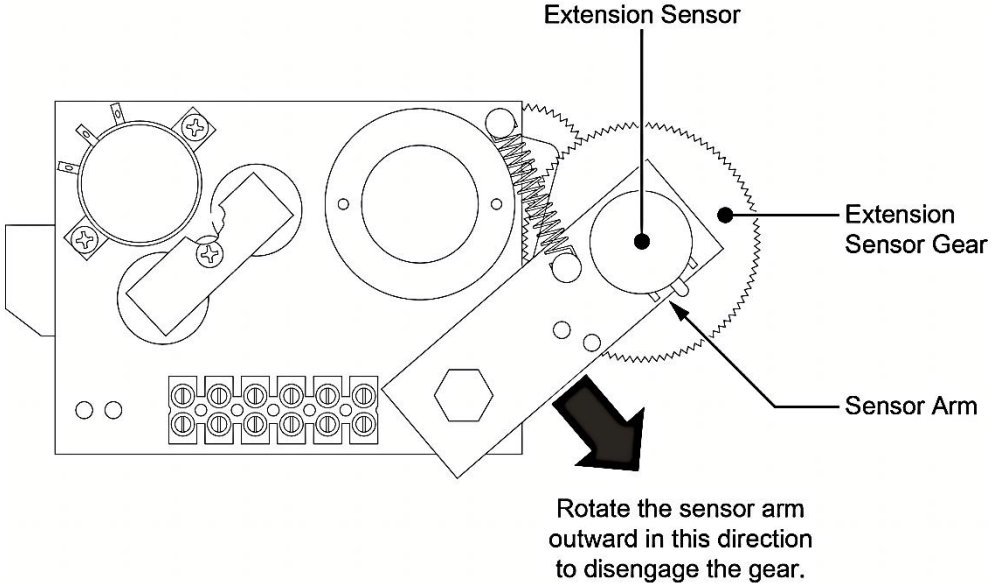

5. Press the “Menu Up” button until “02 Zero Sensors” is reached.
6. Press the “02 Zero Sensors” button one time and the screen should appear as shown.

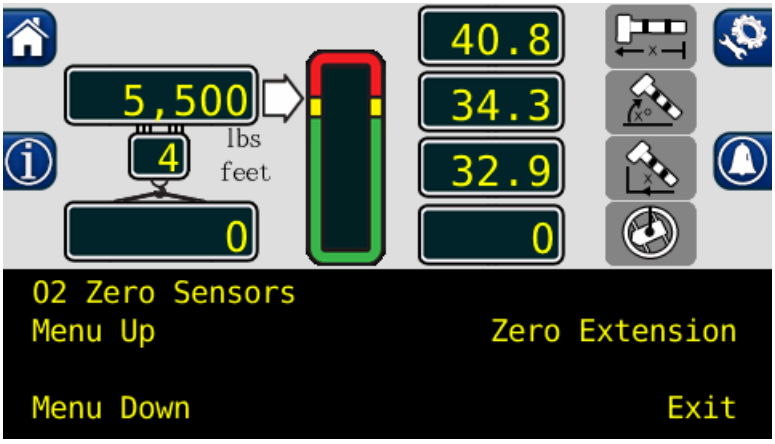

7. Press the “Zero Extension” button to prompt with the question “YES! Calibrate!” Press the “YES! Calibrate!” button to calibrate zero.

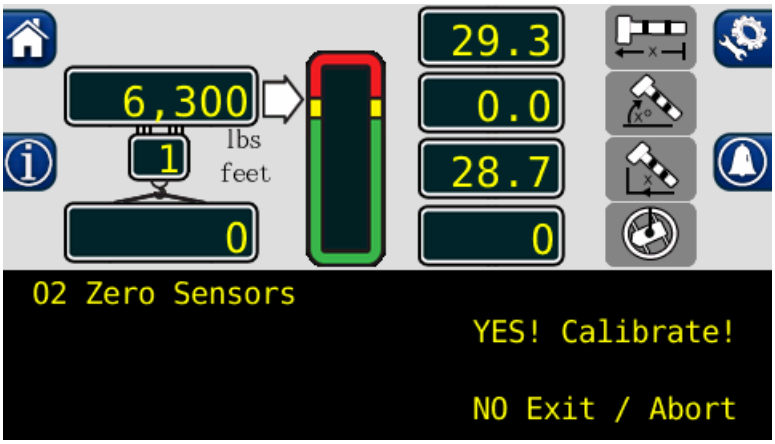

8. The retracted boom length will be displayed in the boom length window. Extension Sensor Zero calibration is complete.

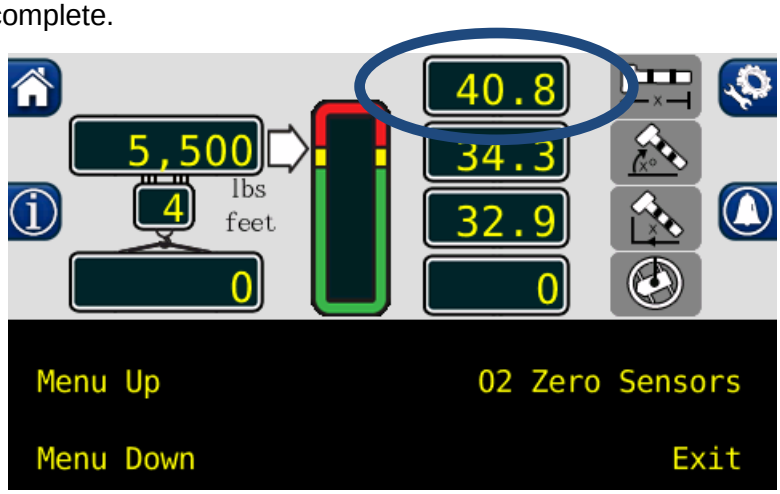

5.5 Calibrating the Angle Sensor Zero

The angle sensors are preset to zero on the Potentiometer before leaving the factory. If the potentiometer is disturbed, the zero setting can be affected. If this happens, the angle sensor will be inaccurate.

If the factory setting has been disturbed, reestablish it by loosening the attaching screws, and rotating the pot until the desired voltage reading is attained.

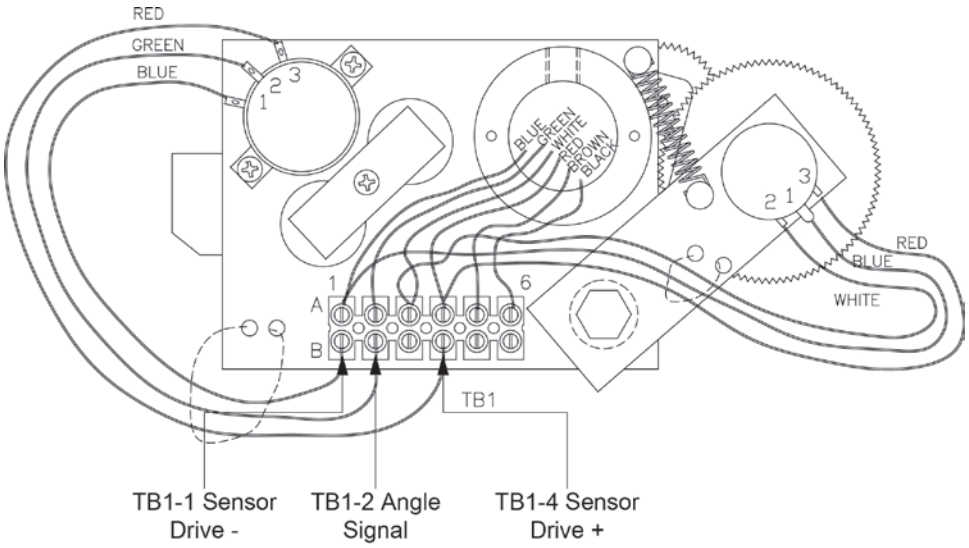

1. Raise the boom to “0.0” degrees. Verify using a digital level.
2. Check the voltage between blue wire and the green wire. It should measure between 0.400 and 0.600V in the correct position.
3. Enter the “02 Zero Sensors” menu.
4. Press the “Menu Up” button to display “Zero Angle”.

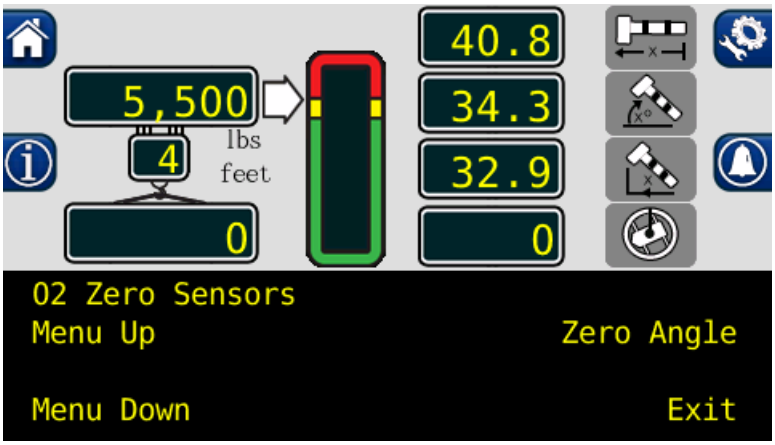

5. Press the “Zero Angle” button.
6. Press the “YES! Calibrate!” button and the routine is complete.

5.6 Calibrating Span of Extension and Angle

WARNING!

THE AREA OVERHEAD ABOVE THE CRANE MUST BE CLEAR OF OBSTRUCTIONS PRIOR TO CALIBRATING SPAN OF EXTENSION AND ANGLE!

In order for the system to properly calculate the boom length and the boom angle, the “Span Number” must be entered into the system. Obtain the Span Number with the following steps:

1. Measure the boom from the base foot pin to the center of the head sheave pin. Record this measurement.

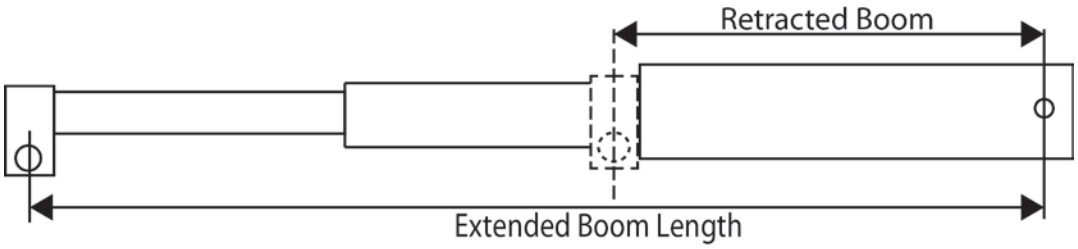

Extended Length – Retracted Length = Span

2. Raise the boom to between 60°-65° and fully extend the boom. Record the measurement from the digital level, for entry into the system later in this procedure.
3. From the main screen, press the “Menu Up” button until “03 Span Sensors” is reached.
4. Press the “Span Extension” button.

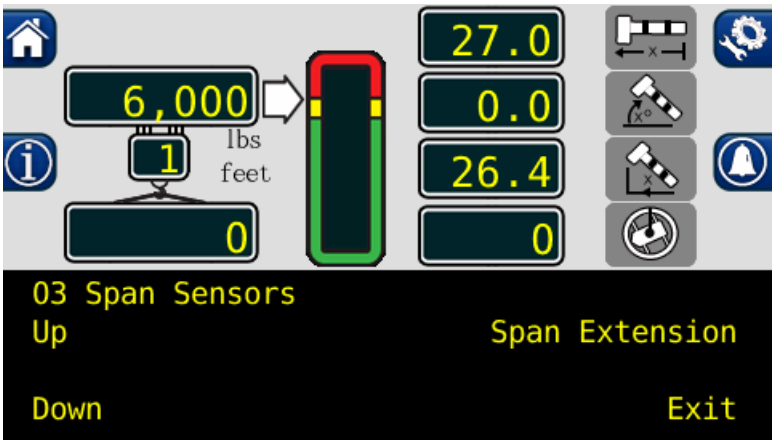

5. Press the “YES! Calibrate!” button.

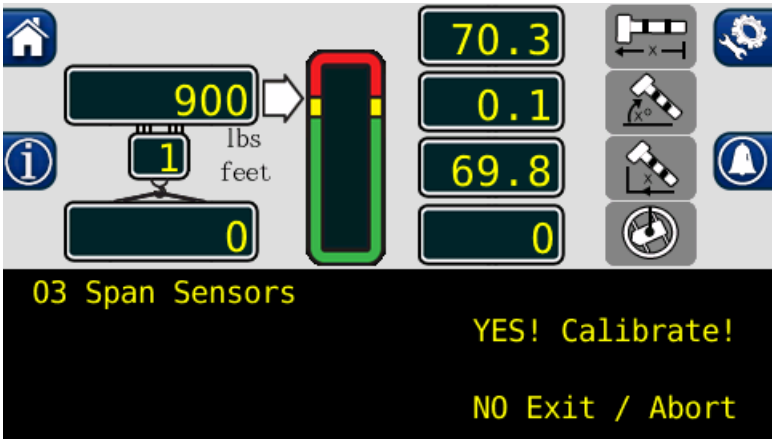

6. The Span of Extension is now calibrated. And the maximum boom length will be displayed.
7. Press the “Menu Up” button to access the Span Angle option.

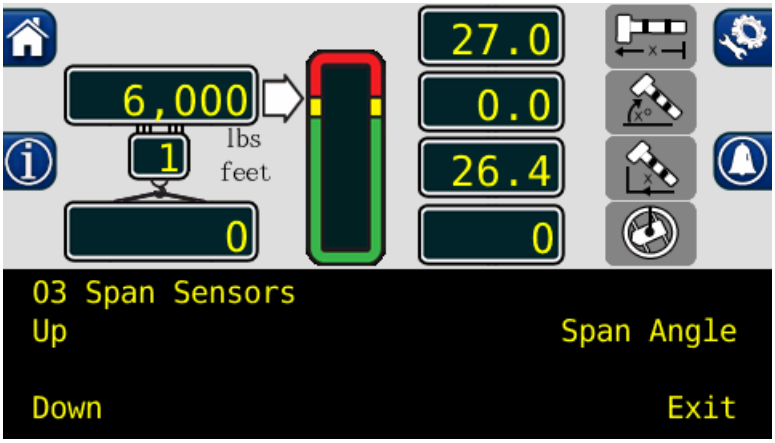

8. Press the “Span Angle” button to enter the current reading from the digital level.

9. Use the following screen to enter the number. Always enter numbers with a decimal point.

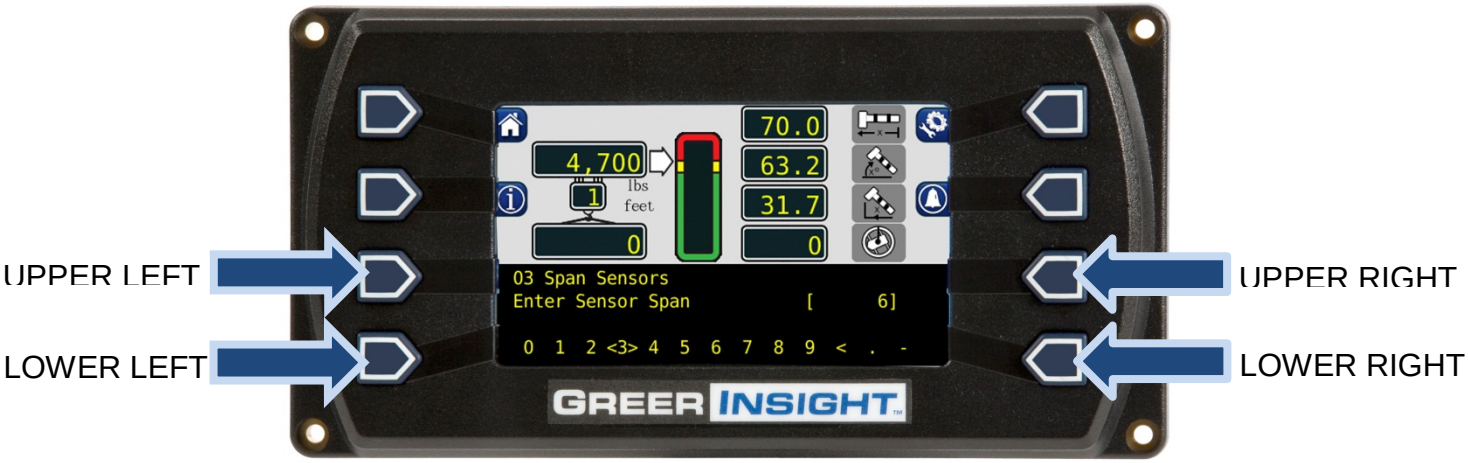

10. The lower left and lower right buttons are used to select the number. The number inside the brackets is the current selection, in the above image, the number 3 is between the brackets.
11. Use the upper left button to enter the numbers, one at a time.
12. When the number is entered, press the upper right button to enter the number into the system memory. Once entered the extension and span calibration routine is complete.

5.7 Calibrating the Swing Sensor (If Equipped)

After completing the extension and angle span, return to the main calibration screen.

1. Press the “Menu Up” button until “04 Swing Sensor” is reached. This menu will allow a zero point to be set on the swing circle and a direction for the system to track the rotation angle.
2. Press the “04 Swing Sensor” button.

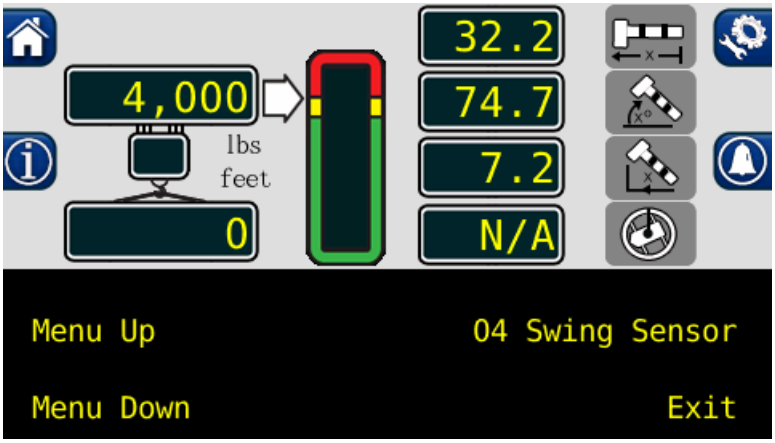

3. Press the “Zero” button, to set the swing sensor to zero with the current boom location.

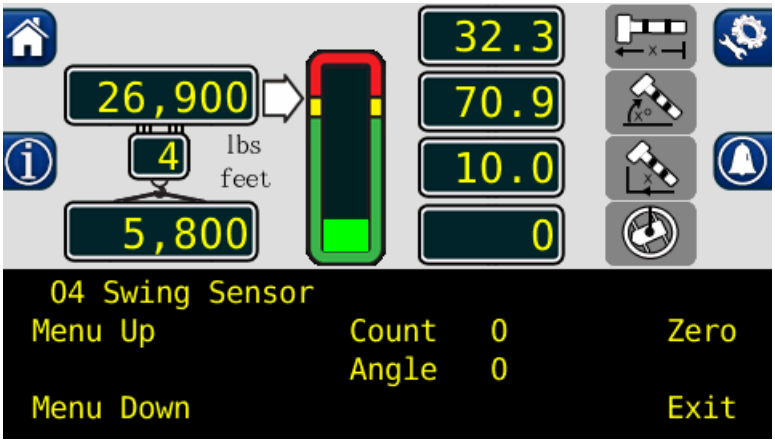

4. The swing sensor is now zeroed.

5.7.1 Calibrating the Swing Direction

The swing sensor supplies data for either direction. For consistency, the swing should count upwards (0, 1, 2, 3, etc.) when rotating clockwise. The direction of the swing can be changed while using the Greer Insight display.

1. While still in the “04 Swing Sensor” menu, and sensor zeroed, press the “Menu Up” button until “Direction = +” is displayed.
2. Press the “Direction = +” button to toggle directions on the swing count.

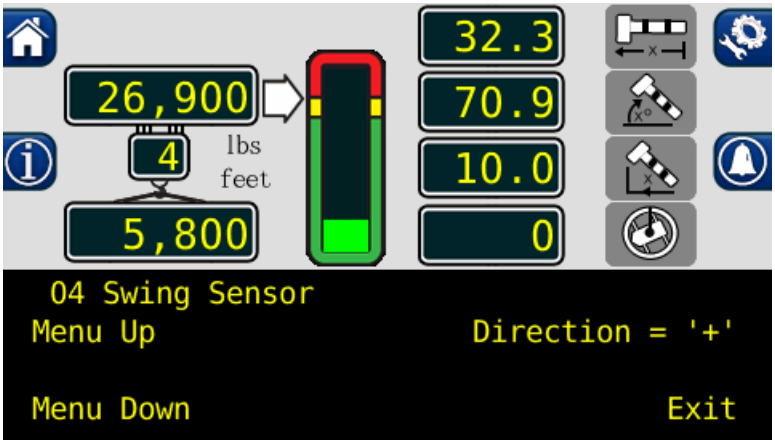

5.7.2 Enabling the Swing Sensor

1. Enter the calibration menu and press “Menu Up” to display “04 Swing Sensor”.
2. Press the “04 Swing Sensor” button. If the swing sensor is connected, entering this menu will automatically initialize the sensor.
3. Press the “Zero” button, to set the swing sensor to zero with the current boom location.

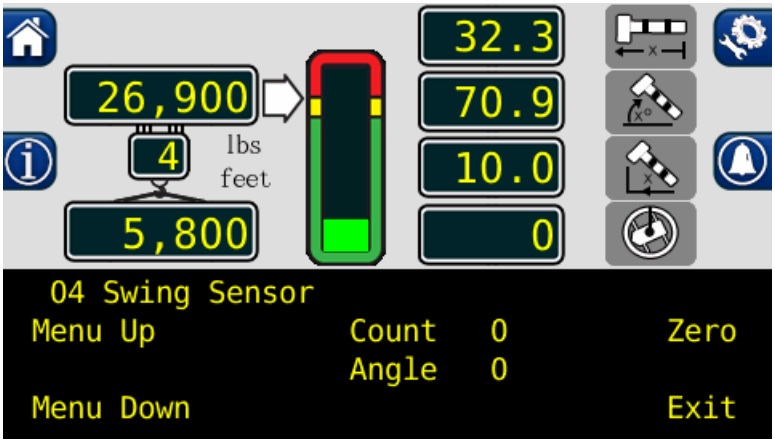

4. The swing sensor is now initialized with a zero point. This will allow the use of the Swing Alarms and Work Area Alarms.

5.7.3 Disabling the Swing Sensor

If there is a problem with the Swing counter or the ISS Module, it may be necessary to disable the functionality in the calibration menu. This will remove any error codes and allow the crane to be operated until the problem can be fixed.

1. Enter the calibration menu and press “Menu Up” to display “04 Swing Sensor”.
2. Press the “04 Swing Sensor” button.
3. Press the “Menu Up” button to display the “Remove Swing Sensor?” option.
4. Press the “Remove Swing Sensor?” button.

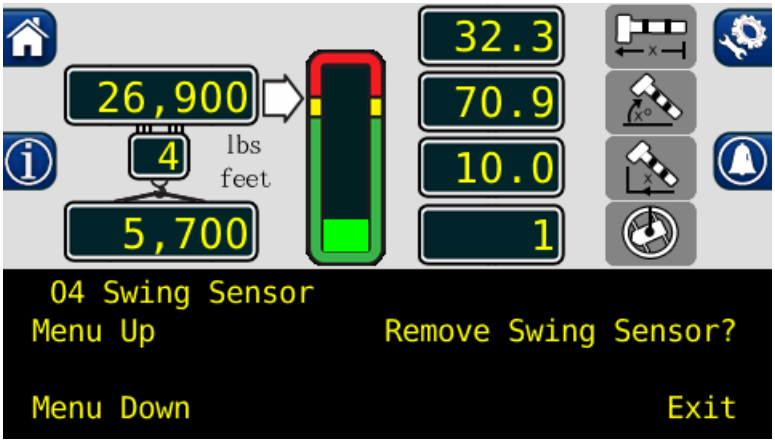

5. Press the “Yes” button when prompted with “Are you sure??”

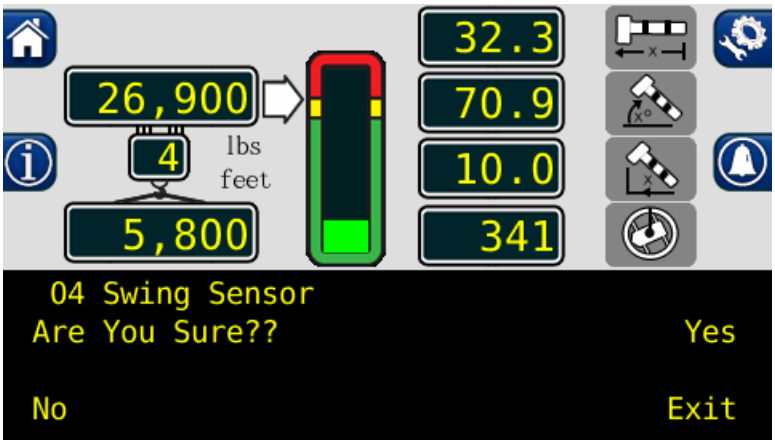

6. The Swing sensor is now disabled. The Swing angle window will display “N/A” instead of a number.

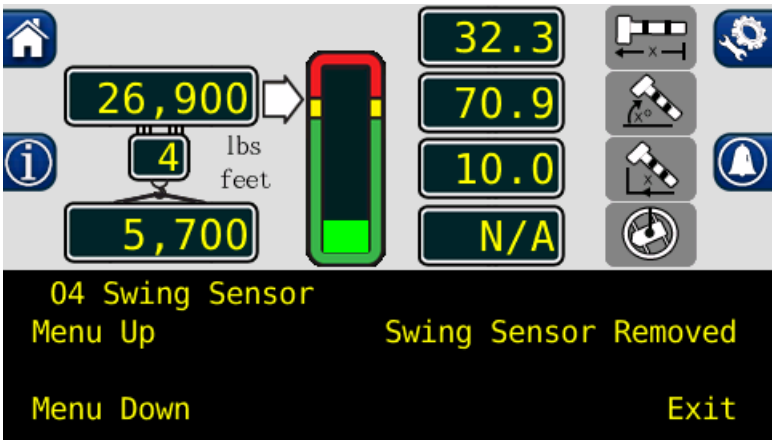

5.8 Calibrating the Outrigger Position Sensor

For cranes with digital switch outrigger position sensors, replace the faulty sensor. No calibration is needed.

At power up, the system will use the last used OPS position and select the corresponding chart. It will display a white arrow above the corresponding outrigger position on the screen. The operator can then continue with setup as normal.

The system will pick the chart based on these inputs:

DI1	DI2	Chart
0	1	No-Span
1	0	Mid-Span
1	1	Full-Span
0	0	Error

5.9 After the Calibration Routine

When the calibration routine is complete, thoroughly test the unit to ensure the radius on the unit is accurate to + .5 of a foot. No negative tolerance is acceptable.

In order to perform load testing, a known weight is necessary. Perform testing from 2-3 different boom angles, as well as extensions.

The load must within +10% when testing, no negative tolerance is acceptable. If the load is outside these limits, the calibration should be rechecked for accuracy.

6.1 Reeling Drum Overview

The primary operation of the Reeling Drum is to measure the extension of the telescoping sections of the main boom. The Reeling Drum also includes an angle sensor to measure the main boom angle, and an electrical slip-ring which transfers the Two-Block signal from the Reeling Drum cable to the system computer. It is important the setup and maintenance of these devices is properly carried out per the procedures in this manual. Incorrect maintenance can result in system calculation errors.

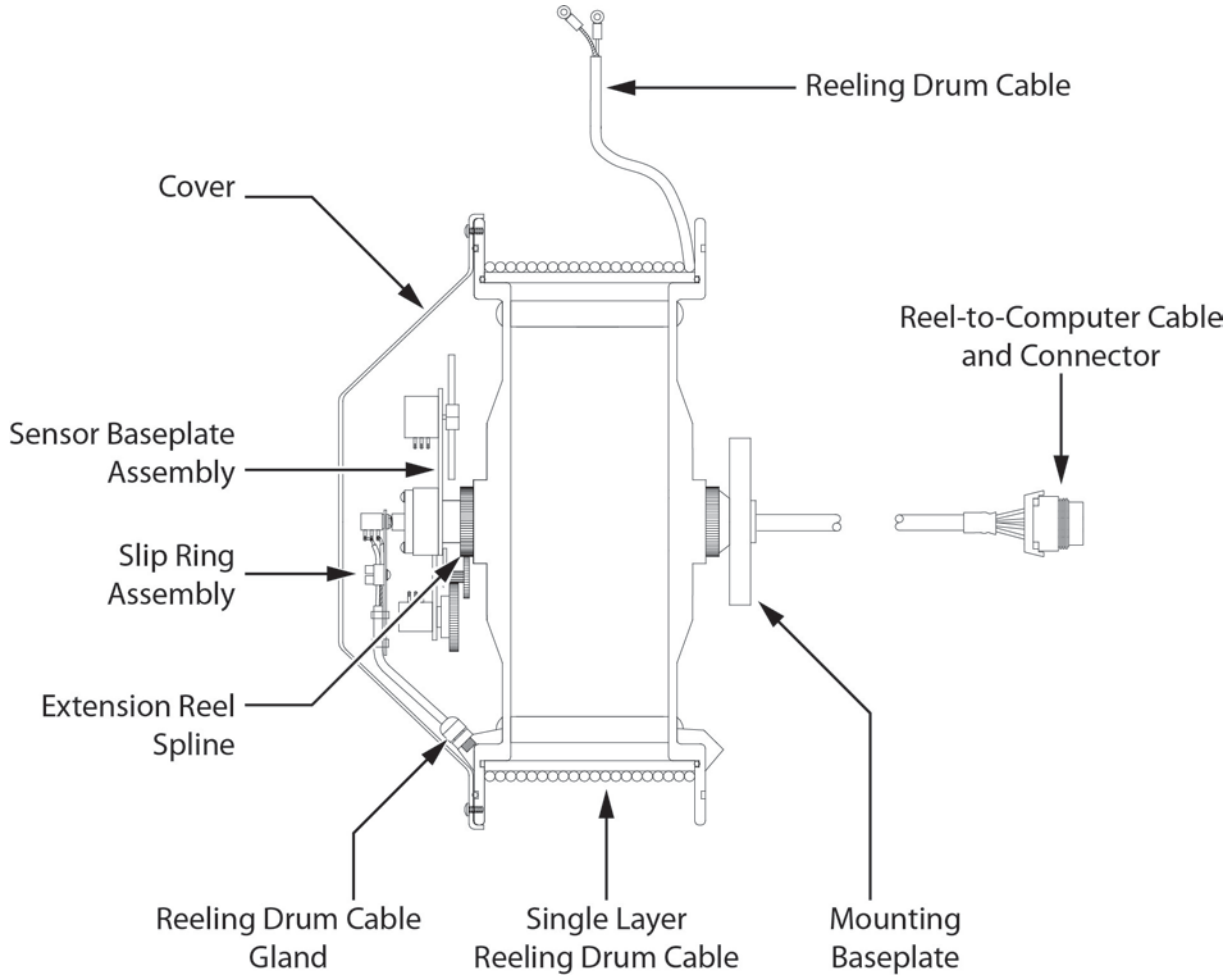

6.2 Checking the Reeling Drum Cable Layering

The extension reel is designed to provide accurate measurement of boom extension. To provide accurate measurement, the Reeling Drum cable must form a single flat layer across the surface of the extension reel as the boom is telescoped in and out. Any stacking of the cable will cause extension errors as the boom retracts.

1. Telescope the boom fully out and then fully in.
2. Check that the reeling drum cable forms a flat single layer across the surface of the extension reel, with each successive turn of cable lying next to the last.

NOTE: If any stacking or build up of the cable occurs, ensure the first cable guide at the top of the boom root section is correctly aligned with the outside edge of the extension reel. Clean the reeling drum cable, and lubricate it with a silicone spray, as shown below.

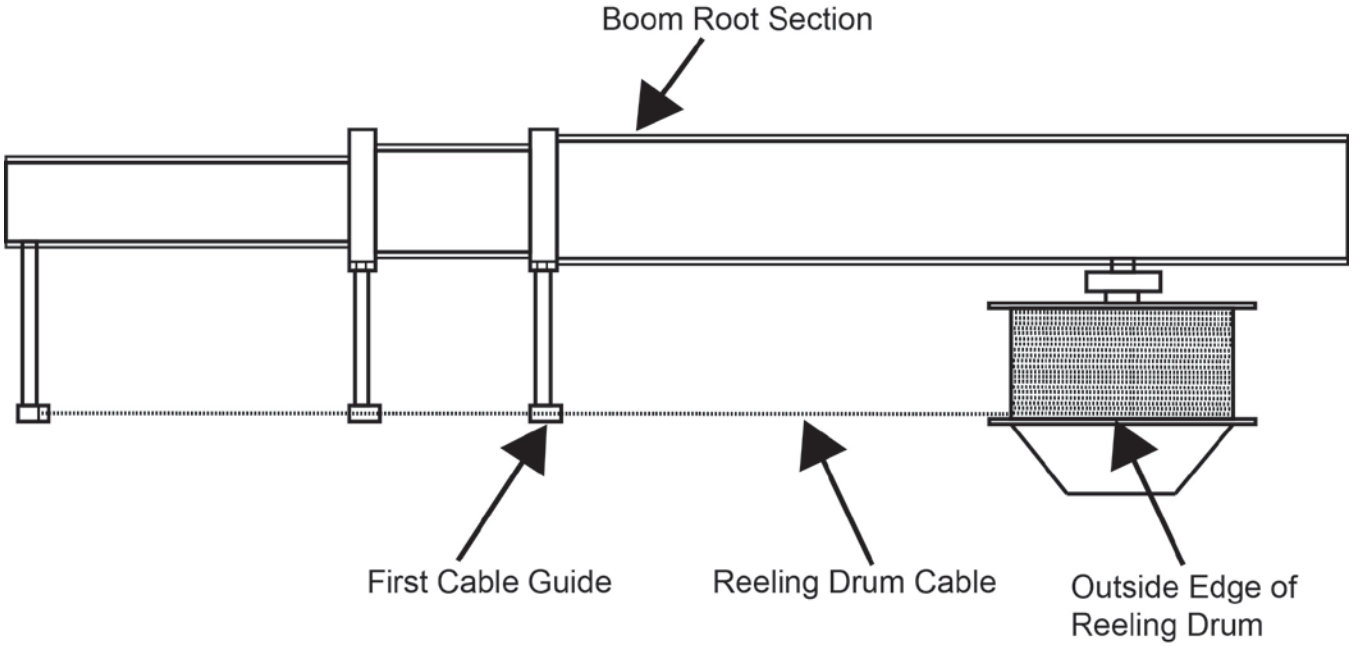

Reeling Drum Viewed from Above

6.3 Checking the Reeling Drum Cable

The outer braid of the cable carries the Anti-Two-Block feed to the switches. If the cable sheath is damaged, this may cause a short circuit to the boom/chassis. The same fault code will be indicated if the ATB switch is closed and the inner core of the cable is shorted to the chassis at some point in the wiring.

1. Carefully inspect the reeling drum cable for wear.
2. Check for signs of damage to the outer sheath of the cable.
3. Check for any signs of severe “kinking” or crushing of the cable.

6.4 Sensor Baseplate Assembly

The Sensor Baseplate Assembly supports and connects the extension and angles sensors. It also supports the two-block switch signal and signal cable to the computer.

Electrical or mechanical failure of either the angle sensor or the extension sensor potentiometers cannot be repaired in the field. The angle sensor pendulum is factory set on the potentiometer shaft and the extension potentiometer gear contains a protection clutch which is difficult to replace in the field. In the event of failure of either item, replace the entire sensor baseplate assembly.

The terminal block (TB1) mounted on the assembly provides wiring connection for all internal parts of the Reeling Drum and Reel-to-Computer cable. Most electrical diagnoses of the boom sensors can be made at this terminal block.

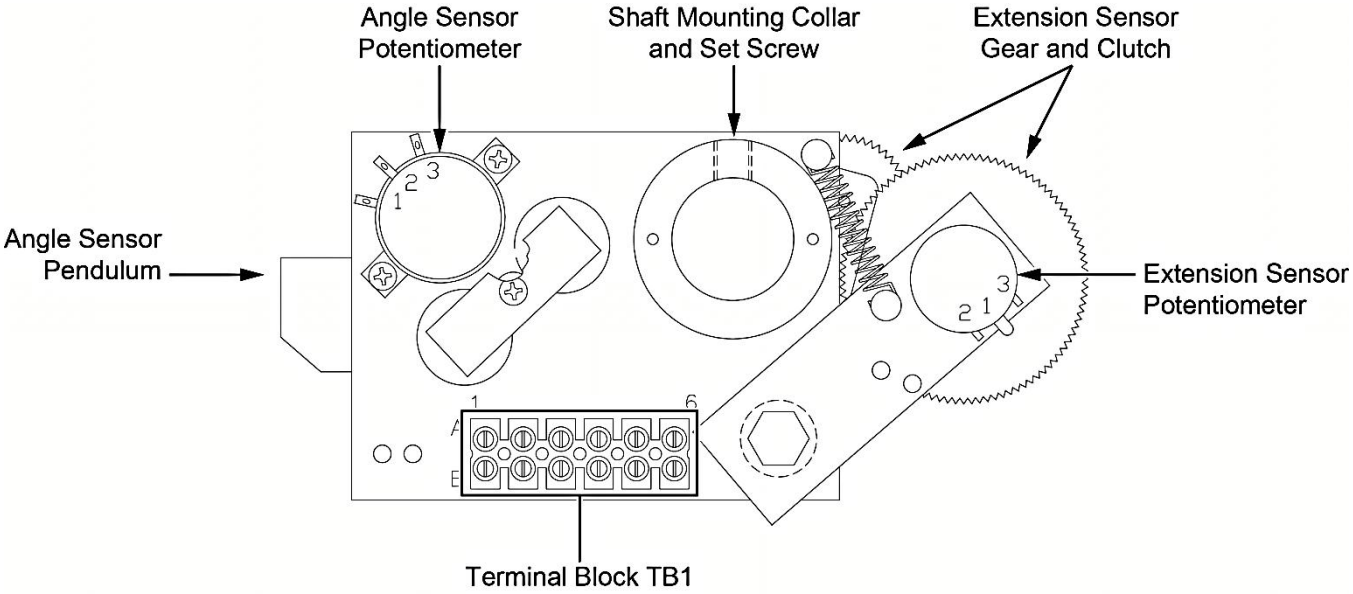

6.5 Reeling Drum Voltage Checks

If problems occur with the two-block alarm operation, angle, or extension sensor, refer to the following chart. Follow the Boom Position/Action column before performing any voltage checks. Measure all voltages with a digital voltmeter set to DC volts range.

SIGNAL	BOOM POSITION/ ACTION	VOLTAGE		VOLTMETER CONNECTION	
		MIN	MAX	RED (+)	BLACK (-)
SENSOR DRIVE	-	+4.7V	+5.3V	RED	BLUE
ANGLE SENSOR OUTPUT	0 degrees	0.4V	0.6V	GREEN	BLUE
EXTENSION SENSOR OUTPUT	0 ft. FULL RETRACTED	0.15V	0.35V	WHITE	BLUE
TWO-BLOCK DRIVE	ATB WEIGHT DOWN	5.5V	7.5V	BLACK	BLUE
	ATB WEIGHT UP	9.5V	10.5V	BLACK	BLUE
TWO-BLOCK SIGNAL	ATB WEIGHT DOWN	5.5V	7.5V	BROWN	BLUE
	ATB WEIGHT UP	0V	2V	BROWN	BLUE

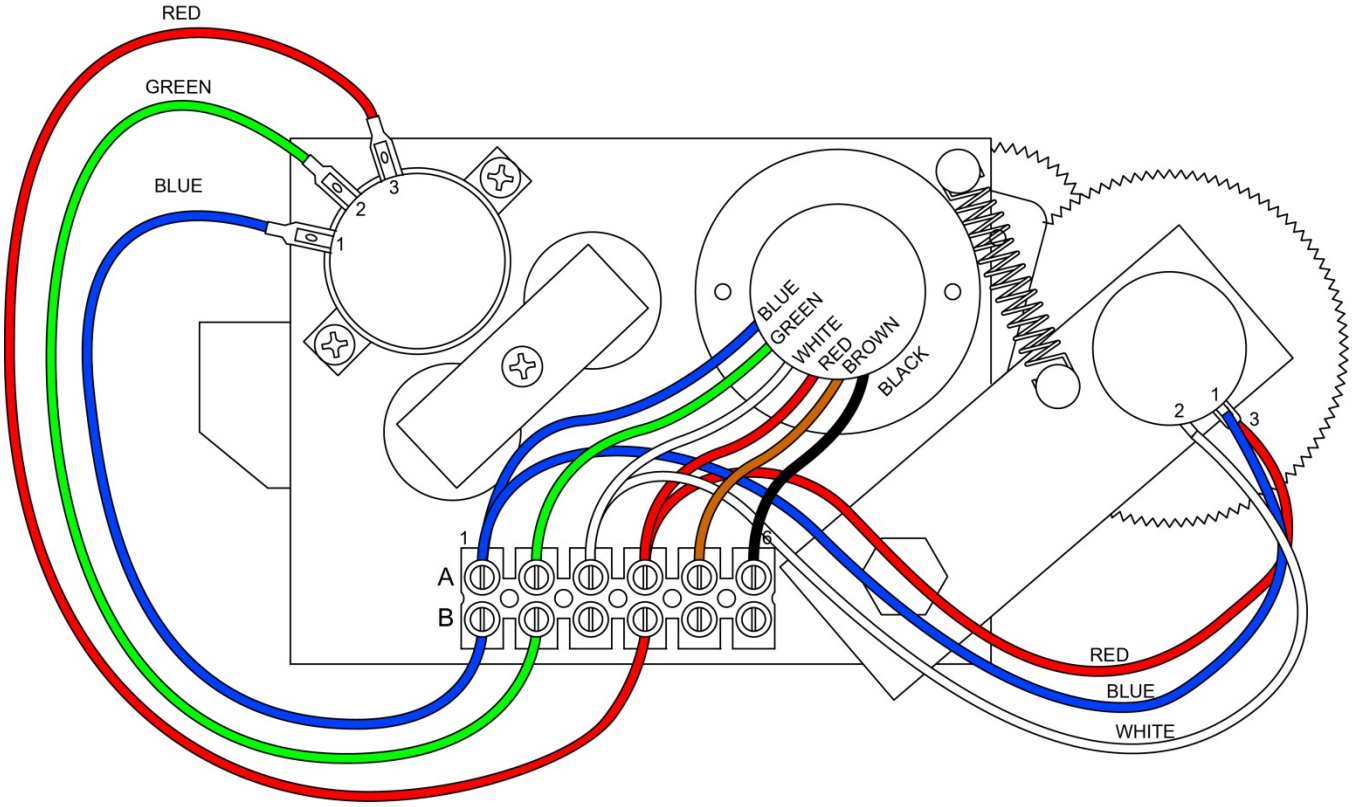

6.6 Anti-Two-Block Function Overview

The computer supplies a protected positive feed to the Anti-Two-Block switches at the boom/jib head via the extension reel signal cable, slip-ring, and reeling drum cable. With the Anti-Two-Block weight hanging freely on the switch, the switch contact is closed and the signal return to the computer is high (6.25 volts). When the weight is lifted by the hook block, the switch contact is opened, and the computer will sense a low signal input (0 volts) from the ATB signal return.

Since the computer checks the protected feed voltage internally, the system is capable of detecting a short circuit of the feed (or the ATB signal return when the switch is closed) to the crane chassis. Refer to **FAULT REPORTING AND FAULT CODES**.

Most problems with the ATB circuit may be identified through inspection of cables, switches, and the extension reel. Damage to these parts may result in continuous or intermittent ATB alarms.

6.7 Checking the Anti-Two-Block Circuit

Before continuing, ensure the connectors are correctly connected to the ATB switches at the boom head/jib. This procedure checks the ATB circuit when no power is applied to the circuit, use the diagram on the following page. If power is present on the circuit, refer to **REELING DRUM VOLTAGE CHECKS**.

1. Remove the extension reel cover.
2. Disconnect the slip-ring arm from the plug by pulling it away from the center of the reel.
3. Close the ATB switch at the boom head by suspending the weight from it or pulling on the chain.
4. Measure the resistance between the blue and green wire terminal connections on the sensor arm.
5. With the ATB switch closed, the resistance should be less than 300 ohms. If not, inspect the reeling drum cable, ATB switch, and the boom head connectors for an Open circuit.
6. Open the ATB switch at the boom head by lifting the weight.
7. Measure the resistance between blue and green wire terminal connections on the sensor arm.
8. With the ATB switch open, the resistance should be greater than 10,000 ohms. If not, inspect the reeling drum cable, ATB switch, and the boom head connectors for a short circuit.

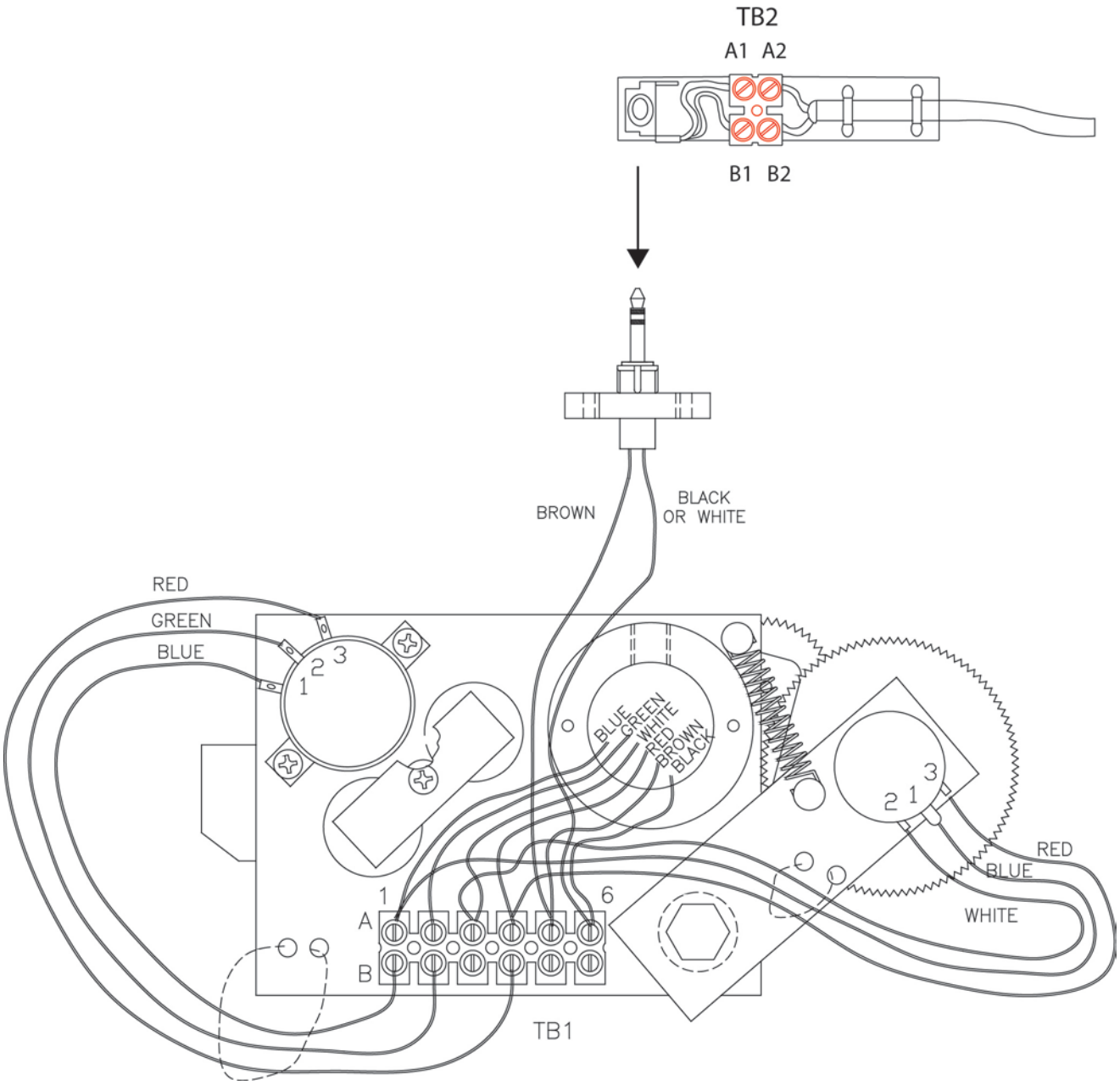
TB2
A1 A2
B1 B2
BROWN
BLACK
OR WHITE
RED
GREEN
BLUE
1
2
3
BLUE
GREEN
WHITE
RED
BROWN
BLACK
3
2
1
RED
BLUE
WHITE
1
6
A
B
TB1

7.1 WAD/ISS Overview (If Equipped)

The WAD/ISS (Work Area Definition/Integrated Swing Sensor) incoporates a sensor housed in the swing drive of the crane that measures the angle of the upper structure of the crane relative to its carrier. The sensor measures the angle by counting electronic pulses on the target gear relative from the zero point (set by the operator) in either a positive or negative direction. The conditioning box translates the signal so it can be processed by the computer and shown in the information window of the display console.

WAD/ISS Conditioning Box

The advantage of the WAD/ISS over a typical swing potentiometer is the swing potentiometer is housed in the collector column and maintenance and/or removal is difficult. The WAD/ISS is a small unit mounted directly onto the swing drive and is easily accessible.

During normal operation, faults detected with the WAD/ISS will be shown on the display unit. During such fault conditions the red “Overload” LED will flash accomapnied by an intermittent audible beep. Additionally, the swing angle display will “ERROR” as well as the information window showing an error condition message. All swing related operator alarms, work area alarms, etc, will be displayed.

7.2 WAD/ISS Troubleshooting Table

Error Message / Problem	Cause	Correction
“SWING SENSOR SIGNAL 1 ERROR!” “SWING SENSOR SIGNAL 2 ERROR!” “SWING SENSOR ERROR!” “SWING SENSOR LOGIC REPORT!”	Cable from sensor to condition box disconnected. Cable from sensor to conditiong box grounded.	Replace sensor.
“SWING SENSOR COMMS ERROR!”	Cable from condiiton box to computer disconnected at computer or conditiong box. Cable from condition box to computer grounded.	Check cable. Check connection at conditiong box and computer. Replace cable. If display shows load, angle, radius, etc, replace the conditioning box.
Intermittent, inaccurate, or no output activity	WAD/ISS too far from target within swing drive. WAD/ISS sensor too close to target within swing drive. WAD/ISS not responding normally but drawing normal current and providing normal outputs. WAD/ISS disconnected from computer.	Check sensor and sensor connection.

7.3 Replacing the Swing Sensor

7.3.1 Swing Sensor Removal

1. Place the boom in the rest (stowed position).
2. Turn off the power to the crane.
3. Disconnect the sensor cable from the conditioning box.
4. Loosen the sensor retaining nut.
5. Remove the sensor from the swing drive housing.

7.3.2 Swing Sensor Installation

1. Insert the threaded end of the sensor into the sensor port of the swing drive and screw it in until the end of the sensor contacts the gear inside the swing drive housing. Do not force the sensor any farther past this point.
2. Note the location of the index notch on the sensor. Rotate the sensor counterclockwise a ½ turn. (Illustrations on next page.)
3. Note the position of the index notch on the sensor and continue to rotate counterclockwise until the index notch reaches the 'three o'clock' or 'nine o'clock' position.
4. If the initial 180° turn puts the index notch on the 'three o'clock' or 'nine o'clock' position, continue to rotate counterclockwise until the next 'three o'clock' or 'nine o'clock' position is reached.
5. For calibration instructions, refer to **Swing Sensor Setup**.

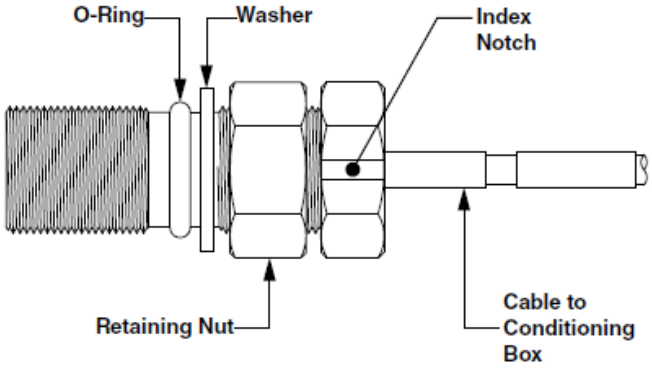

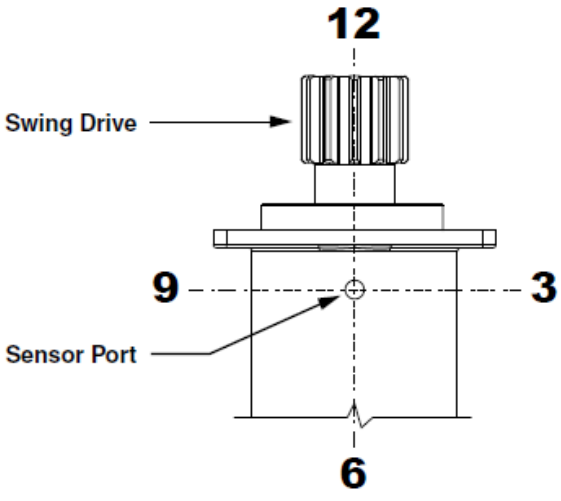

PINION UP

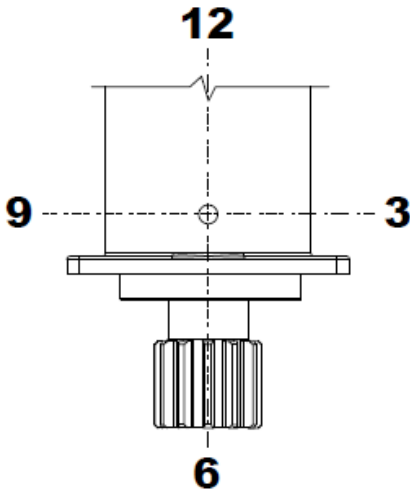

PINION DOWN

7.4 Replacing the Conditing Box

1. Place the boom in the rest (stowed position).
2. Turn of power to the crane.
3. Disconnect the cables from the conditioning box.
4. Remove the two nuts attaching the conditiong box to the mounting bracket.
5. Install the new conditioning box onto the mounting bracket.
6. Reconnect the cables to the new conditioning box.

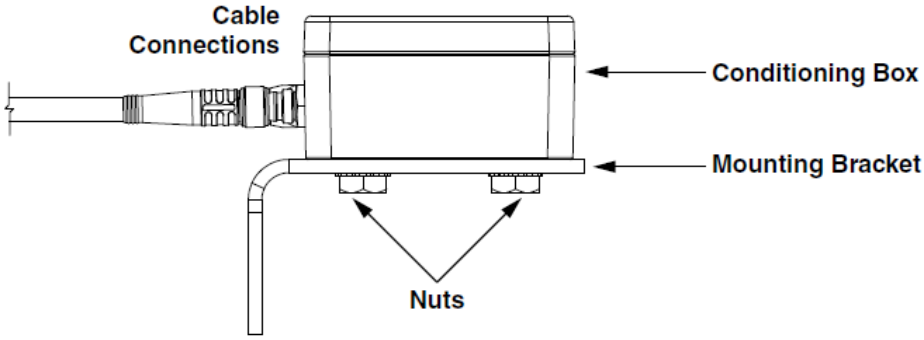

POWER to Move the World™

A DOVER COMPANY

11135 South James • Jenks, OK 74037
Phone: (918) 298-8300
Fax: (918) 298-8301

www.team-twg.com

Greer Company is a part of TWG.

As a leader in product innovation, Greer Company is committed to the ongoing improvement of its equipment. We reserve the right to make changes to our products without notice.

W450321A 09/12